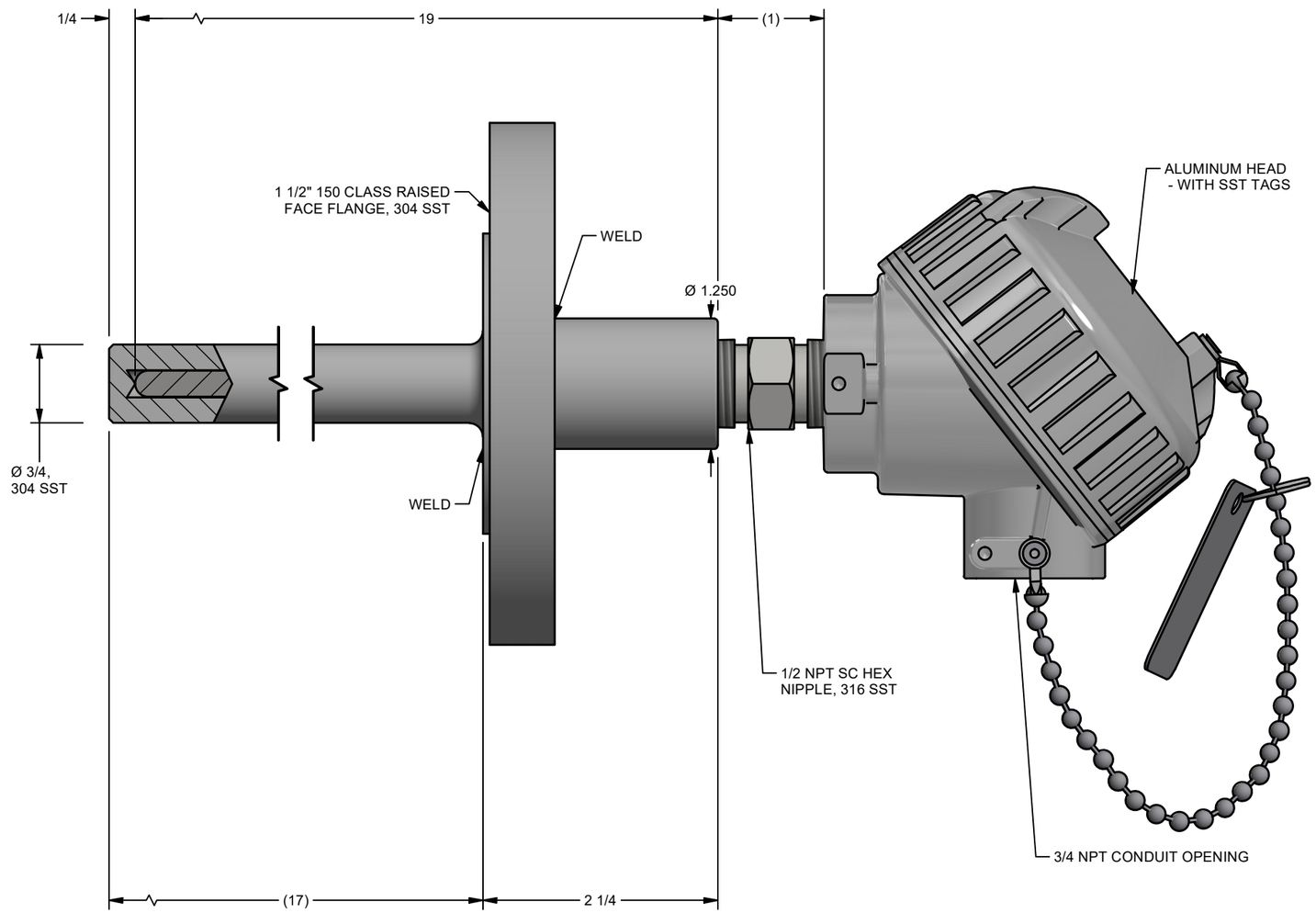

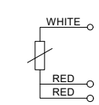

TAGGING:

STAMPING:

- Single Element RTD
- 100 ohm Platinum
- Temperature Coefficient 0.00385 ohms per Degree C
- Tolerance Class A
- Temperature Range -30 to 200 Degrees C
- 1/4 Inch Diameter 316 Stainless Steel Sheath
- 3 Wire
- Standard Flanged - 0.260 Bore
- 304 Stainless Steel
- 1(1/2) Inch Flange Size
- Raised Face - 150 Class
- S Dimension: 19 Inches
- U Dimension: 17 Inches
- Customer Specified Part # on Thermowell
- Self-contained Spring-loaded Element
- 1/2 Inch x 1/2 Inch NPT Stainless Steel Hex Nipple
- Aluminum Screw Cover Head - NEMA 4X Rated
- Stainless Steel Tag

CATALOG #: RAF185L483-SF415R11909S-SC-8HN31,I

FOR:	PYROMATION
TITLE:	SPRING LOADED SENSOR ASSEMBLY
SIZE: B	DWG. NO. & SHEET NO: 10386000335
REV.	
DRAWN BY:	GP03
DATE:	8/5/2025

TOLERANCES

FRACTION DIM =
DECIMAL DIM .XX =
DECIMAL DIM .XXX =
ANGULAR DIM =

This document is PROPRIETARY to Pyromation

pyromation beyond measure
FORT WAYNE, INDIANA 260-484-2580