ALL DIMENSIONS REFERENCE

44-32XXX2XX-687

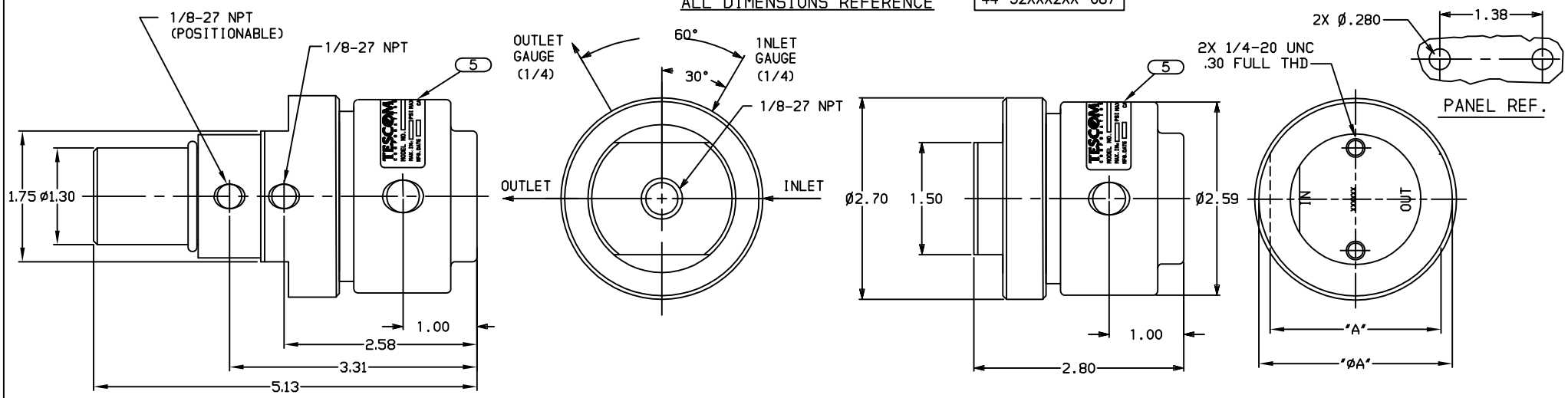

44-32X1XXXX & 44-32X2XXXX

INLET & OUTLET PORT	"A"	"B"
1/4, 3/8 & 1/2 NPT	Ø2.59	1.00
3/8 SAE & MS33644	2.44	1.00
1/2 MS33644	2.29	1.00
3/4 & 1 NPT Cv 1.0	Ø3.23	1.26

44-3200 SERIES REGULATOR

SPRING LOADED, HAND OPERATED: PRESSURE REDUCING REGULATOR WITH METAL TO METAL SEALED DIAPHRAGM.

MODIFICATION FEATURES:

SPRING BIAS AND/ OR DOME LOADED:
316 SST DOME PARTS

GENERAL SPECIFICATIONS:

INLET PRESSURE: SEE TABLE V
OUTLET PRESSURE: SEE TABLE II
DESIGN PROOF PRESSURE: 150% OF RATED PRESSURE
PRESSURE RATING: PER CRITERIA OF ANSI/ASME B31.3
OPERATING TEMPERATURE: -40°F TO +165°F
DOME PRESSURE: SEE TABLE II
LEAKAGE: INTERNAL: BUBBLE TIGHT
EXTERNAL: <2 X 10^{-8} atm cc/sec. He
FLOW CAPACITY (C.v.) SEE TABLE V
WEIGHT: APPROXIMATELY 3.50 LBS.

MATERIALS CONTACTING LINE MEDIA:

SEAT: SEE TABLE VI
SEAL: SEE TABLE VI
BODY: SEE TABLE I
RETAINER, SEAT: NITRONIC 60
DIAPHRAGM: SEE TABLE I
REMAINING PARTS: SEE TABLE I

ASSEMBLY INFORMATION:

FOR ASSEMBLY OF THIS
UNIT USE SPEC: A60772-17 - (44-32XXJXX1) & (44-32XXXHXX3)
A60772-22 - (44-32X0JXX1) & (44-32XX0HXX3)

44-32X0XXXX

SERIES NUMBER
MODIFICATION NUMBER

44-3261H263-687

TABLE I

DASH NO.	BODY MATERIAL	DIAPHRAGM	SPRING	REMAINING PARTS
6	316 SST	316 SST	316 SST	316 SST

TABLE II

DASH NO.	OUTLET PRESSURE 2 3	BIAS PRESSURE
0	250 PSI	0 PSI
1	250 PSI	0 - 50 PSI
2	250 PSI	0 - 100 PSI

TABLE III

DASH NO.	IN & OUT PORT TYPE
2	NPT
3	MS33649

TABLE V

DASH NO.	MAX. INLET PRESSURE	FLOW CAPACITY
1	3000 PSI	Cv = 1.0
3	500 PSI	Cv = 1.0

TABLE IV

DASH NO./LTR	INLET & OUTLET PORT SIZE
6	3/8
8	1/2
12	3/4
16	1

TABLE VI

DASH LTR.	SEAT MATERIAL	SEAL MATERIAL
H	TEFLON	TEFLON: O-RING
J	CTFE	TEFLON: SPRING ENERGIZED LIP SEAL

NOTES:

2. MAXIMUM DIFFERENTIAL BETWEEN DOME PRESSURE AND OUTLET PRESSURE IS 500 PSIG.

3. REGULATOR PRODUCES A NEGATIVE BIAS OF:
5-10 PSI WITH ZERO INLET PRESSURE.
20-30 PSI WITH 500 & 3000 PSIG INLET PRESSURE.

REV.	DATE	ECO NO.	BY:	APPR
DA	7-24-15	50879-15	TZ	AAH
D	3-26-12	1645-12	MKS	BJT
C	11-05-04	1798-04	DKD	DLT
B	6-24-04	1516-04	JK	DP
A	5-15-03	191-03	EWN	TMB

REVISIONS

REFERENCE DRAWING(S)

TESCOM CORPORATION
INDUSTRIAL CONTROLS DIVISION
ELK RIVER, MN USA

INFORMATION CONTAINED ON THIS DOCUMENT IS THE PROPERTY OF TESCOM CORPORATION. NO RIGHTS ARE CONVEYED NOR IS PERMISSION TO DISCLOSE TO OTHERS GIVEN.

UNLESS OTHERWISE SPECIFIED:
.0 ± .020 ANGLES: ±1°
.00 ± .010
.000 ± .005
SURFACE ROUGHNESS: 100√
CORNER & FILLET RADII: .005-.020
THREADS: CLASS 2
REMOVE ALL BURRS
MFG. SPEC. 60301

DRAWING MADE IN THIRD ANGLE PROJECTION
(DO NOT SCALE DRAWING)

MATERIAL: X

FINISH: X

DRAWN BY:	CHECKED BY:	APPROVED BY:
EWN 5-15-03	TMB 5-15-03	TMB 5-15-03

NAME: INSTALLATION INFO

SCALE: 1:1 | SIZE: C | NUMBER: 44-32XXX2XX-687
CODE NO. 13669 | SHT. 1 OF 1

305-0.P3 6/95

DP